矽力杰半导体技术有限公司

Silergy Semiconductor Technology Ltd, Corp

智能家居解决方案

www.silergy.com

公司概览
Company Overview

- 矽力杰于2008年成立，2013年上市，立足于自主创新，布局全球，做模拟芯片行业的技术领跑者。过去10年年成长率超过30%，是亚洲最大的独立模拟芯片设计企业。截止2019年5月份，我们有764名员工，1008个专利发明。

- **Silergy Corp. was founded in 2008 and listed in 2013. Based on independent innovation and global layout, Silergy has become the leader in the analog IC industry. With annual growth of over 30% over the past 10 years, it is the largest independent analog chip designer in Asia, By the end of May 2019, we have 764 employees and we have 1008 patents.**

© 2019 Silergy Corp. All Rights Reserved

全球布局
Global Location

全球在职员工数：~800

Total Employees: ~800

全球分部：20处

Global Divisions: 20

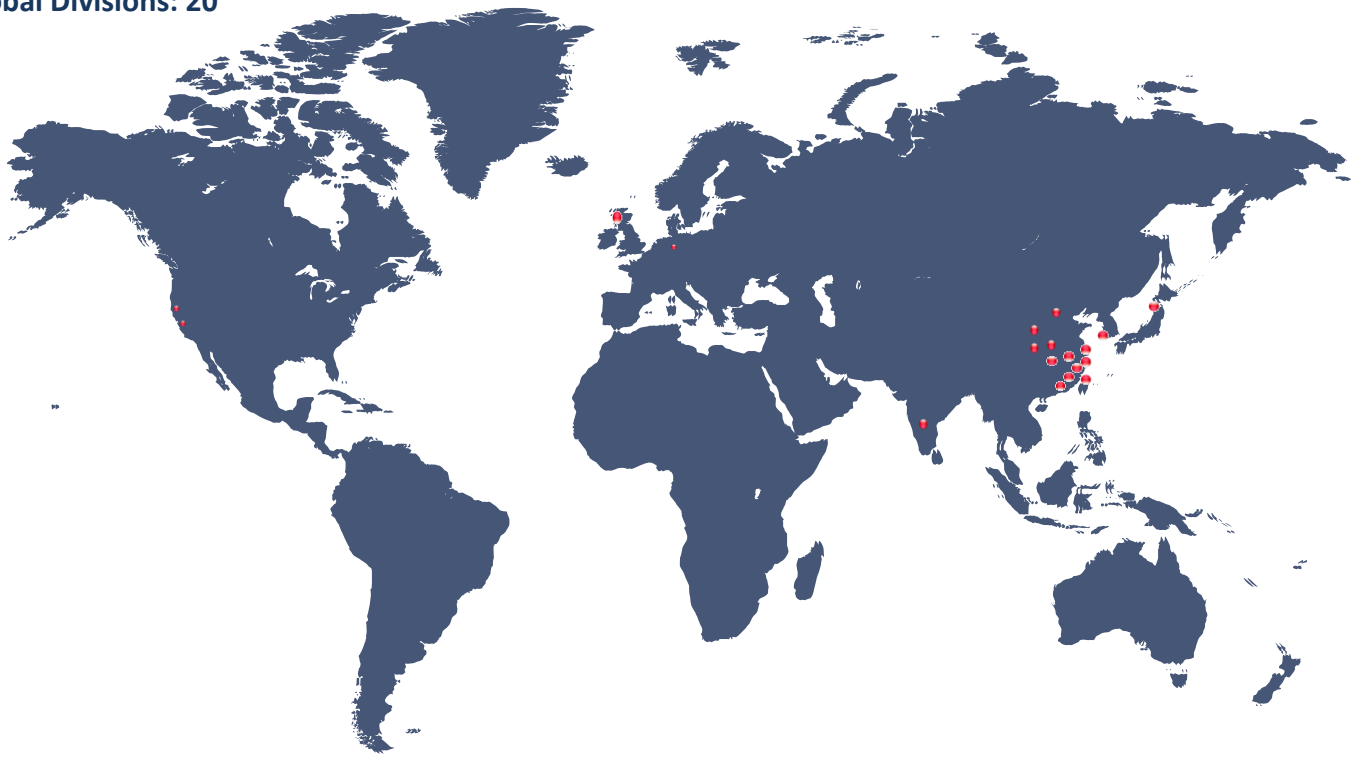

© 2019 Silergy Corp. All Rights Reserved

发展历程
Milestone

2008
矽力杰集团成立
Silergy Incorporated

2009
业界首颗6V, 2A,1MHz同步降压芯片, SOT23封装
Industry First 6V,2A,1MHz Sync Buck IC in SOT23

2010
通过ISO9001 认证
ISO9001 Certification

2011
世界最小 6V/6A/1MHz 同步降压DFN2x2封装
World's Smallest 6V/6A/1MHz Sync Buck in DFN2x2

2012
南京子公司成立
Establishment of Nanjing Subsidiary
国家教育部工程实践中心
Engineering Practice Center of the Ministry of Education

2013
台湾证交所上市
IPO at Taiwan
红鲱鱼世界百强
Red Herring Global Top 100

2014
亚洲最大的模拟IC设计企业
Asia No.1 Analog IC Corp
第16届国家专利优秀奖
16th National Patent Excellence Award

2015
第17届国家专利优秀奖
17th National Patent Excellence Award

2016
业界首创30V/10A单电感同步降压PD方案 QFN4x4封装
Industry First 30V/10A Single Inductor Sync Buck-Boost PD Solution, QFN4x4

2017
400nA超低静态电流智慧降压IC,DFN2x2
400nA Super Low I_Q Buck Converter in DFN2x2

2018
业界首创 1.8μA 静态电流高压降压IC
Industry First 1.8μA I_Q HV Buck

2019

© 2019 Silergy Corp. All Rights Reserved

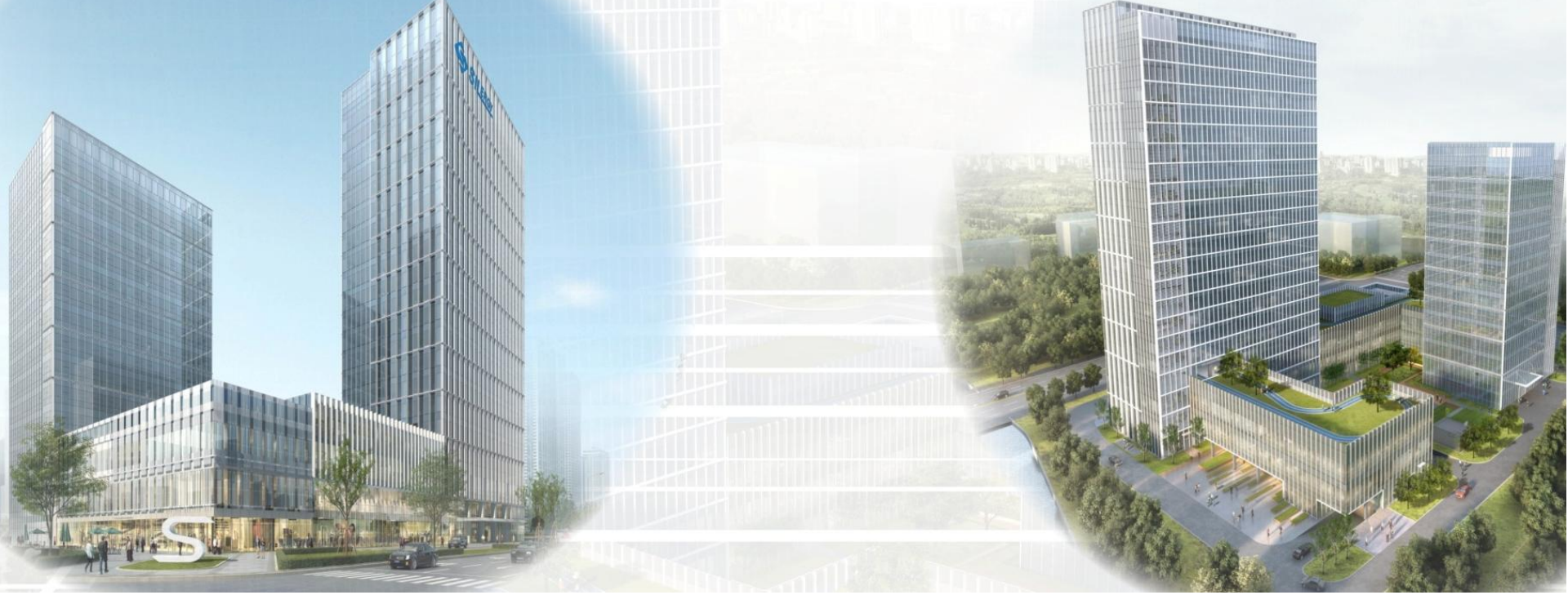

矽力杰研发总部

杭州市滨江区联慧街6号矽力杰大楼

Silergy Building, NO.6 Lianhui Street, Binjiang District, Hangzhou

© 2019 Silergy Corp. All Rights Reserved

高端应用引领未来
High-end Applications, Leading the Future

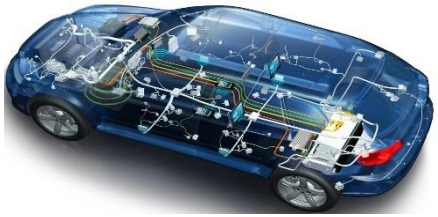

Silergy+ Inside

矽力杰智能家居整体解决方案:
电源产品、功率计量, 电池管理, 光传感器, 蓝牙MESH,智能照明....

© 2019 Silergy Corp. All Rights Reserved

我们需要怎样的智能家居？

愉悦

体验·操作

内容·互动方式

上云·手机控制

© 2019 Silergy Corp. All Rights Reserved

基础信息– 重要!

© 2019 Silergy Corp. All Rights Reserved

矽力杰：完整的电源产品 - Power

Provided Total Power and Periphery Solutions:

No	Product Line	Application
1	DC to DC (Buck, Boost, Buck/Boost)	General discrete power application(TV, Monitor, Smart Phone, PAD…)
2	Power Module (Choke Embedded)	Wearable Device, Car, Server, Industrial…
3	PMIC	SSD, Flat Panel, TV, Power bank, Wearable
4	ESD/TVS/EMI filter/Surge Protection	NC, Smart Phone, NB, TV….
5	Switching Charger	NB, Smart Phone
6	Power Protection Switch/USB Switch	Industrial, Car, 3C, NC, NB..
7	LED Lighting	Tube, Bulb, industrial, commercial
8	AC to DC	Adapter, AC charger
9	Audio	TV,NB, Smart Phone, Car, BLE speaker
10	Others	Wireless Application

© 2019 Silergy Corp. All Rights Reserved

矽力杰：数模产品 - SoC

Provided Specific SoC With Proven IPs

No	Product Line	Application
1	Meter	Utility meter application
2	EMP	Embedded Power measurement
3	Sensor (Light Sensor)	TV, Surveillance, Smart Phone, Automotive
4	BLE	SmartLighting/MESH, IoT
5	Gas Gauge	Portable Set, IoT
6	TPMS	Tire Pressure Monitoring
7	Voice FE Processor	AI & Load recognition for IOT devices
8	ASIC	Mixed digital and analog for specific application

© 2019 Silergy Corp. All Rights Reserved

自有的工艺器件技术使能高密度高效率

- Virtual IDM business model with proprietary BC²D technology

(Bipolar+CMOS+Complementary DMOS)

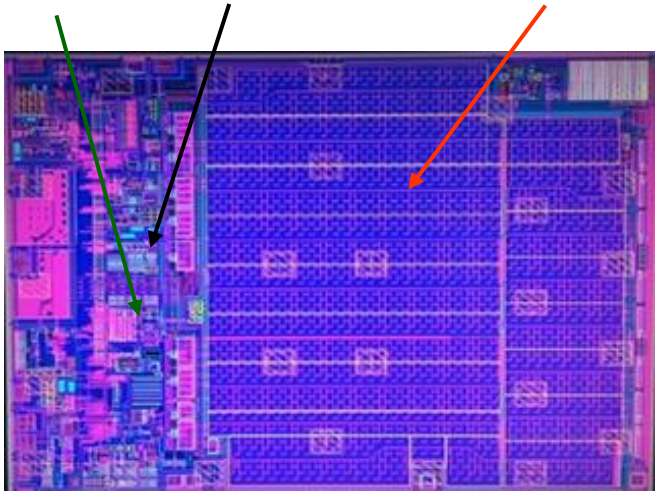

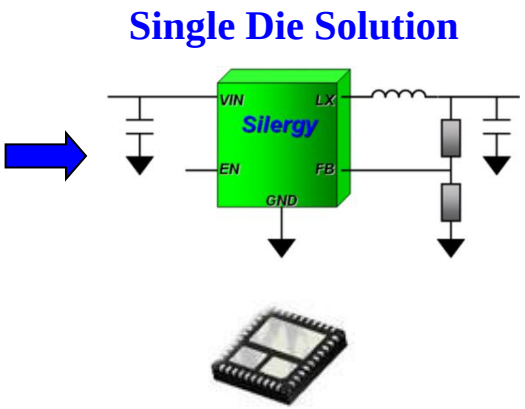

BC2D process flow compatible with mainstream retrograde 0.35/0.18/90nm CMOS process on bulk p-type substrate. No special equipment or process module is needed.

© 2019 Silergy Corp. All Rights Reserved

丰富的数模技术/专利资源

- Digital Core with proven product/application

ARM 8051 RISC

- Analog IPs
  - RTC, Amplifier, ADC, Sensor(Pressure/Wakeup/Light) ...

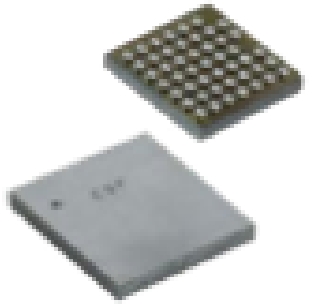

- Algorithm
  - Coulomb, Cryographic, Moto driver...

© 2019 Silergy Corp. All Rights Reserved

智能家居-矽力杰提供的方案

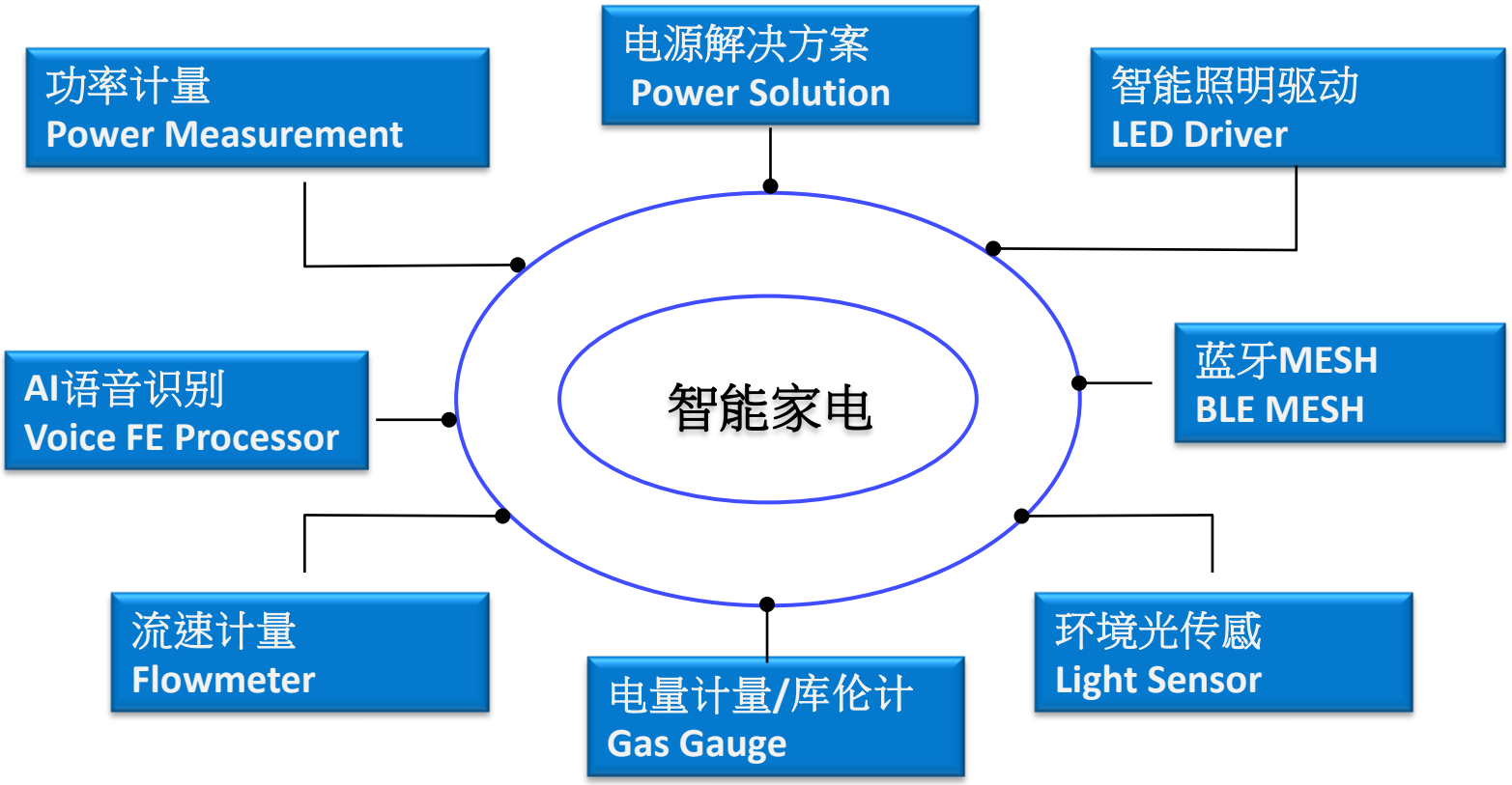

© 2019 Silergy Corp. All Rights Reserved

目录

1. EMP/功率计量
2. 光感 for IOT
3. 电量计/库伦计
4. BLE MESH/智能照明驱动

© 2019 Silergy Corp. All Rights Reserved

Silergy - EMP/功率计量

- SY7T6xx
- 78M6610(1P)
- MAX78630(3P)

© 2019 Silergy Corp. All Rights Reserved

History of the Teridian team

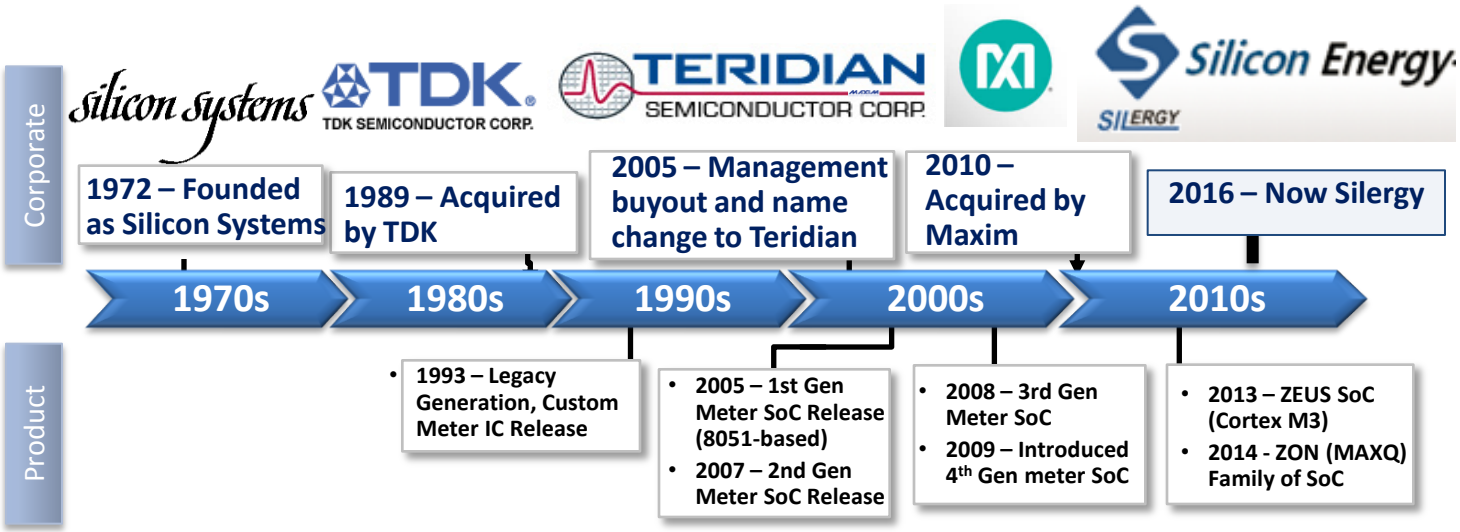

© 2019 Silergy Corp. All Rights Reserved

计量的核心 - 实时信号处理

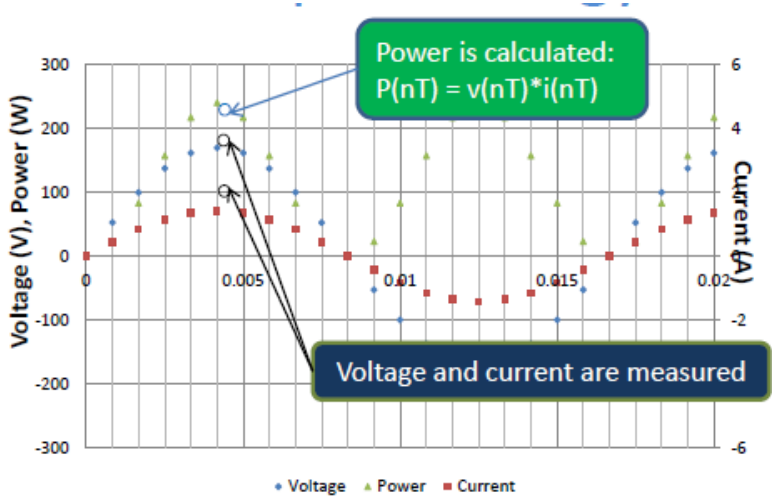

◆实时信号处理
Real Time Processing

实时信号是连续的，但采样和处理的时间是离散n*T。
样本计算公式：

$$V_{RMS} = \sqrt{\frac{1}{k} \times \sum_{n=0}^{n=k} v(nT)^2}$$

$$I_{RMS} = \sqrt{\frac{1}{k} \times \sum_{n=0}^{n=k} i(nT)^2}$$

$$P = \frac{1}{k} \times \sum_{n=0}^{n=k} v(nT) \times i(nT)$$

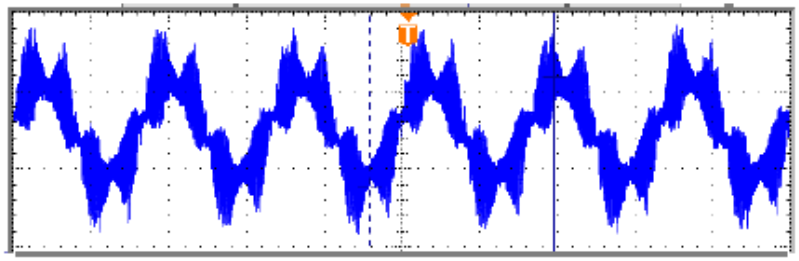

Current waveform into a 350W switching power supply at 50% load

◆完整电源质量分析
Power Quality Monitoring

➢基础数据
- V, I, W, PF ...

➢可靠性数据
- Minimum and maximum line voltage
- Maximum current and power
- Minimum and maximum frequency
- Peak voltage and current
- Crest factor
- Harmonic distortion...

© 2019 Silergy Corp. All Rights Reserved

大型设备监测/功率管理应用

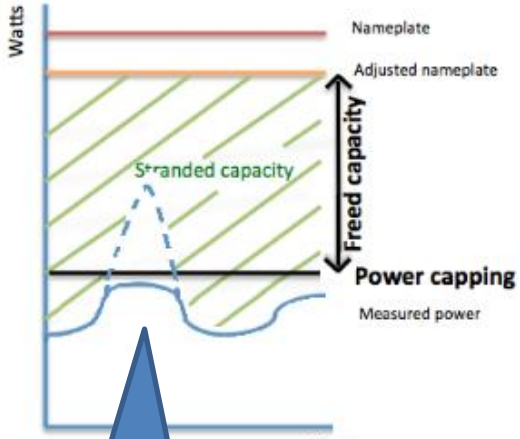

提供可重复、实时对全负载范围的波形检测和数据计算更新

© 2019 Silergy Corp. All Rights Reserved

智能排插方案

Smart Plug Solution (SY7T609+S1/SY7T609+R1):

- 1 Voltage and 1 Current
- Relay Control
- SPI/I2C or UART interfaces
- Harmonics Measurements
- Auto-Report Function (UART)
- Reference Design Available

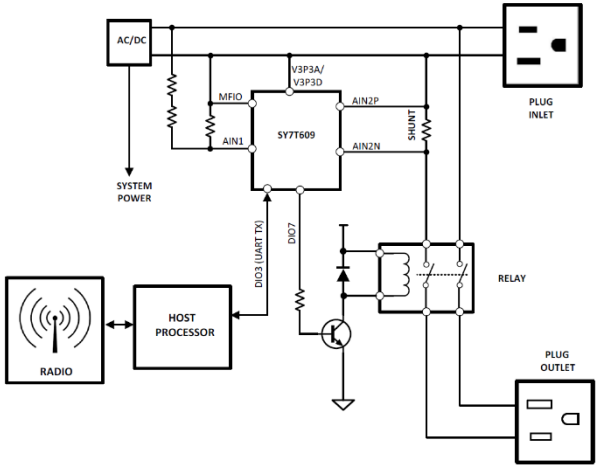

过零检测/继电器自动控制
Zero-Crossing/Relay Control

继电器

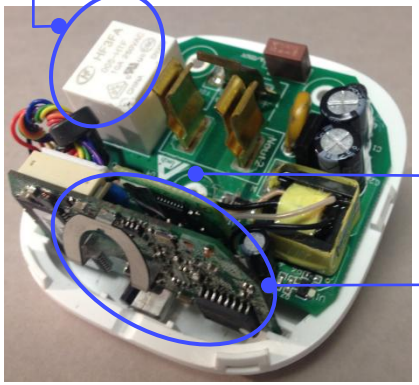

计量模块

WiFi模块

© 2019 Silergy Corp. All Rights Reserved

Silergy -光感 for IOT

- SY3088PS-G01
- SY3079
- SY3122-H1

© 2019 Silergy Corp. All Rights Reserved

光感应用 - 光感/距感

- The main function of ALS (Ambient Light Sensor) is to close or adjust the brightness of LCD backlight based on the changes in ambient light.

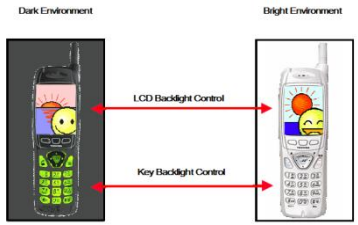

© 2019 Silergy Corp. All Rights Reserved

SY3088PS32-G01-距感-TWS耳机

SY3088PS32-G01 VCSEL

- PD & VCSEL distance 0.8mm

for small hole design ➔ Φ 2mm PMMA lens

- VCSEL Light source

➔ Better for white color earphone

- LCP Baffle in module

Reduce CT

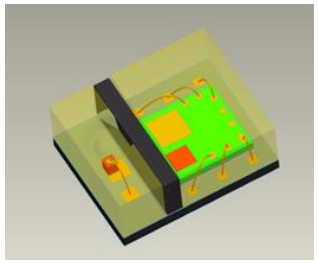

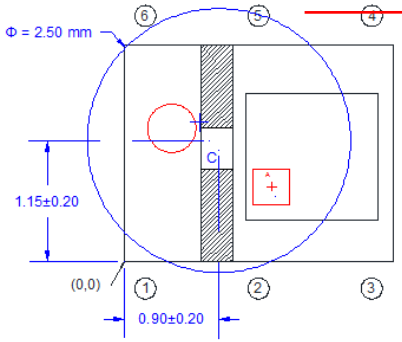

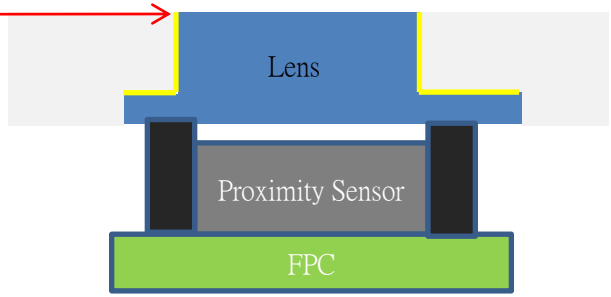

© 2019 Silergy Corp. All Rights Reserved

SY3079-光感-显示控制

SY3079AS32-S02(Side look)

Package size : 2.95 x 1.25 x 1.5(t) mm
Sensitivity : 0.015lux/count @200ms
0.0077lux/count @400ms
- PD size : 0.25 x 0.42mm
- Side-look surface mount

- Ambient & Clear 2channels
(Front Bezel color calibration)

Side look Package

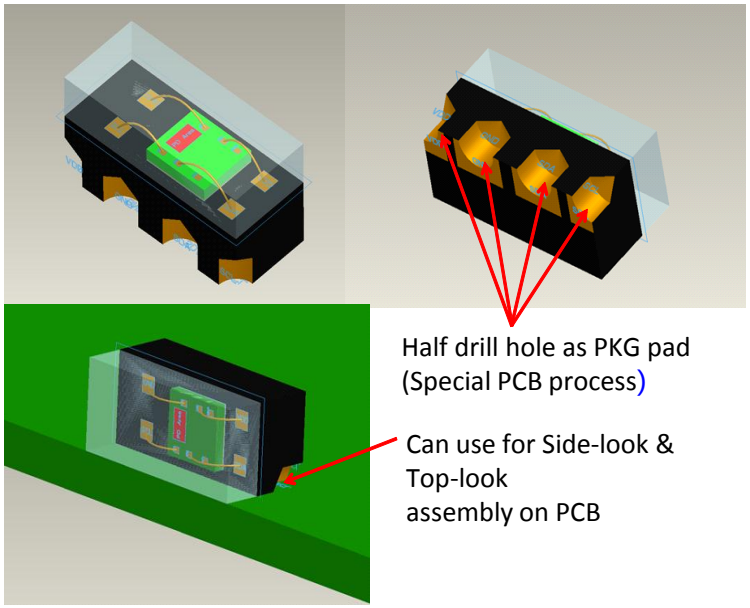

Half drill hole as PKG pad
(Special PCB process)

Can use for Side-look &
Top-look
assembly on PCB

SY3079AS22-J00

Package size : 2.0 x 1.5 x 0.6(t) mm

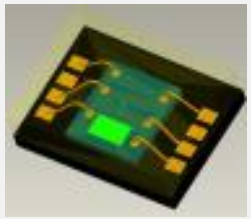

© 2019 Silergy Corp. All Rights Reserved

SY3122-H1 医疗应用

SY3122-H1 (Light to frequency Sensor)

- Package size : 4.6x4.6 – 3pin DIP
- Voltage : 2.7~3.6V
- +-200ppm/ ℃ light tolerance
- Low Dark frequency <1Hz @ 50 ℃
- SPO2(Blood Oxygen) test by 660 / 880nm

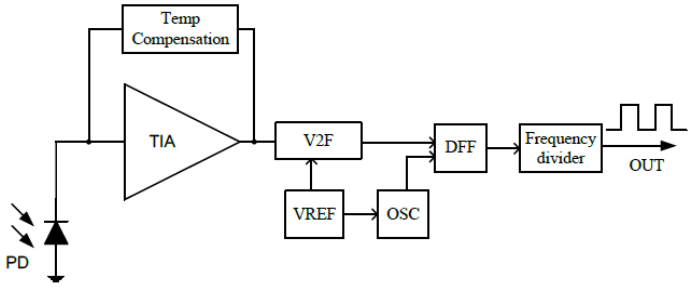

Fig.2 Function Block Diagram

© 2019 Silergy Corp. All Rights Reserved

Silergy -电量计Gauge for IOT

- SY3901
- EG2803
- EG2805

© 2019 Silergy Corp. All Rights Reserved

库仑计产品介绍

➢SY3901 IPhone Only

- Pack side 1s gauge
- 14bit I/V ADC
- ***HDQ interface***
- Support 1.8V I/O Level
- Programmable
- ***Internal temperature sensor***
- Coulomb counting
- ***Supper IPhone full range of models***

➢EG2803 Pack side

- Pack side 1s gauge
- 14bit I/V ADC
- I2C / 1-wire interface
- Support 1.8V I/O Level
- Programmable
- I/V/T data logging
- External & Internal temperature sensor
- Coulomb counting

➢EG2805 System side

- System side 1s gauge
- ***Chip Enable***
- ***Programmable I/Os***
- 14bit I/V ADC
- I2C / 1-wire interface
- Support 1.8V I/O Level
- Programmable
- I/V/T data logging
- External & Internal temperature sensor
- Coulomb counting

© 2019 Silergy Corp. All Rights Reserved

SY3901库仑计 – 应用框图

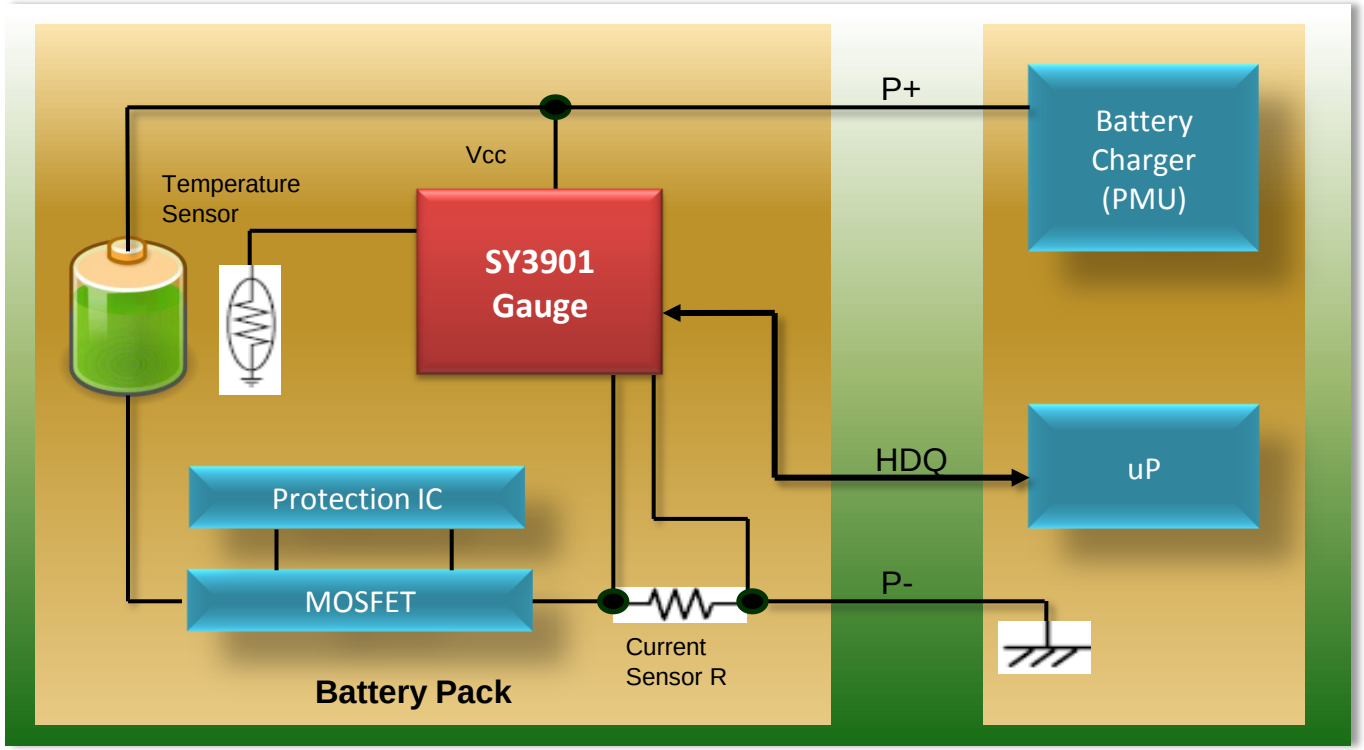

© 2019 Silergy Corp. All Rights Reserved

Silergy -智能照明/LED驱动

- SY37xxx - BLE MESH
- SY58xx/87xx - LED驱动

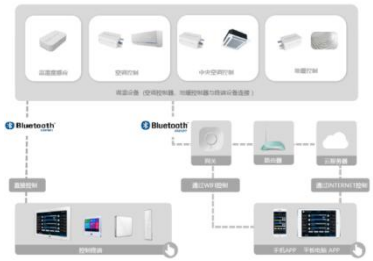

© 2019 Silergy Corp. All Rights Reserved

矽力杰BLE方案：SY37010

- MCU Core
  - ARM Cortex-M0
  - 32KB OTP with code protect
  - 128KB flash (co-packaged)
  - 80KB ROM
  - 16KB system RAM
  - 32KB Develop RAM
- Peripheral IPs
  - 2 UARTs
  - 2 I²C
  - 2 SPI (1 for SPI flash)
  - 1 7816 Bus
  - 6 channel PWM
  - 4 channel 12-bit ADC input

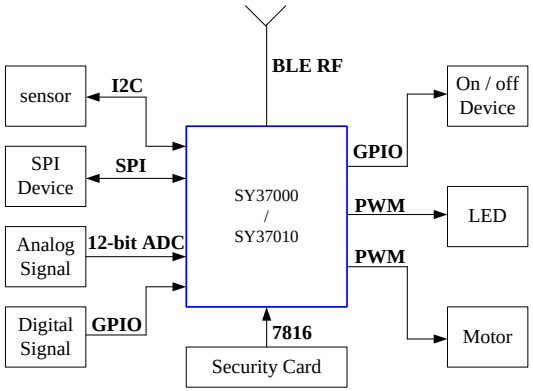

SmartPlug with BLE@天猫

Silergy BLE Module

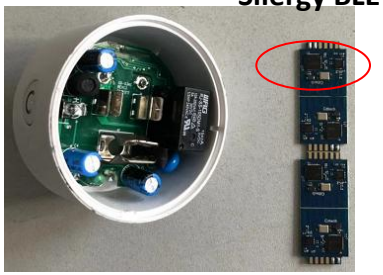

© 2019 Silergy Corp. All Rights Reserved

服务全球的矽力杰LED驱动产品

◆LED调光驱动
Dimmable LED Driver

- Triac/调光LED驱动2017 & 2018全球出货领先

◆继续创新-高集成&低成本
Technical innovation

- 2016收购NXP照明驱动产品线

© 2019 Silergy Corp. All Rights Reserved

适合于家电的几款LED驱动推荐

PN.	CH	V_{IN}(V)	V_{O_max} (V)	I_{LEDmax}/CH (mA)	Interface	Package	Topology	Benefits
★SY7721	1	5~28	90	500	PWM	SO8	Boost CC	Integrated MOS
SY7728F	4	4.5~30	60	240	PWM	SO16/E	Boost+4CH LDOs	Good Matching Accuracy
SY7724	4	2.8~24	33	40	PWM	QFN3x3-16	Boost+4CH LDOs	
SY7766	6	2.6~28	36	50	PWM	QFN3x3-20	Boost+6CH LDOs	PWM/Analog/Mix dimming mode
★SY7766B	6	2.6~28	36	20	PWM	QFN3x3-20	Boost+6CH LDOs	PWM/Analog/Mix dimming mode

© 2019 Silergy Corp. All Rights Reserved

SY7721-LCD Backlight Driver, Boost

Features

- Boost constant current output
- Integrated 100V 4.6A MOSFET
- Switching frequency ~120KHz
- Support 20KHz-1MHz PWM dimming signal to achieve linear dimming
- Excellent small dimming scale accuracy
- Support 90Vmax and 500mA max output
- Open LED& Short LED protection
- Short output current sensing resistor protection
- Short inductor& diode protection
- Package: SO-8

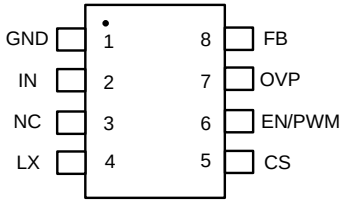

Application Circuit

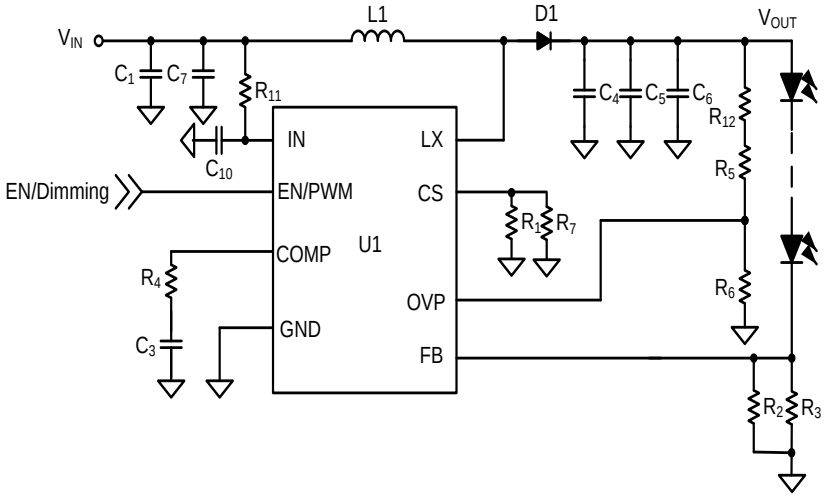

© 2019 Silergy Corp. All Rights Reserved

SY7766B-6-ch Boost LED Driver

Features

- 2.6~28V input range
- Programmable Fsw:500kHz to 1.2MHz
- PWM dimming frequency:100~25kHz
- Integrated 6-ch current source, up to 20mA/CH
- Drives LED strings up to 40V
- Dimming Mode : PWM, Analog, Mixed-Mode
- Package: QFN3x3-20
- Efficiency up to 94%

Application Circuit

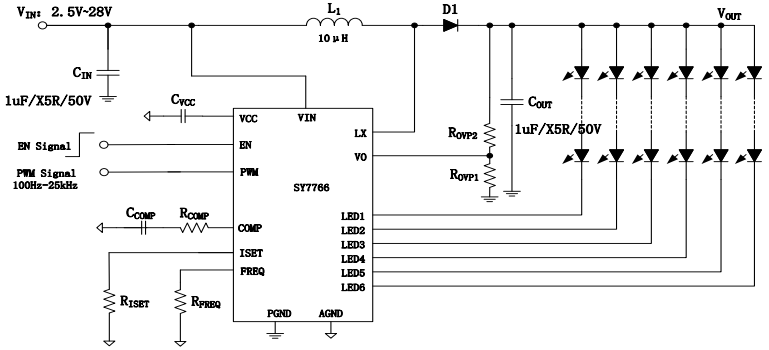

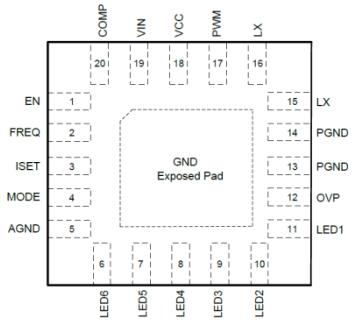

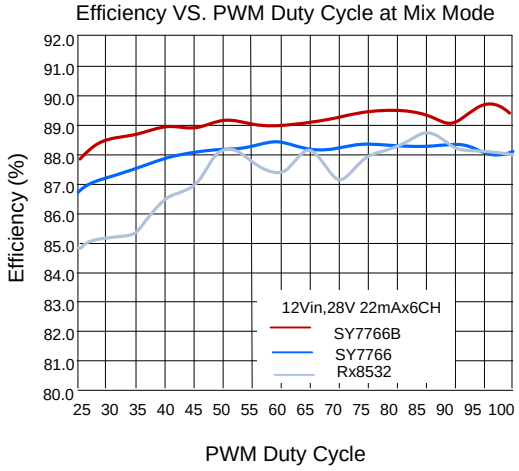

© 2019 Silergy Corp. All Rights Reserved

Thank You!

© 2019 Silergy Corp. All Rights Reserved